712-201 Brushless motor Slotless (inrunner)

Ø12 x 20mm / with dual shafts / sensorless

PRECISION MICRODRIVES ™

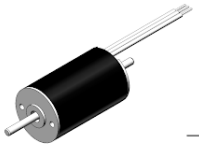

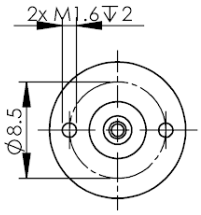

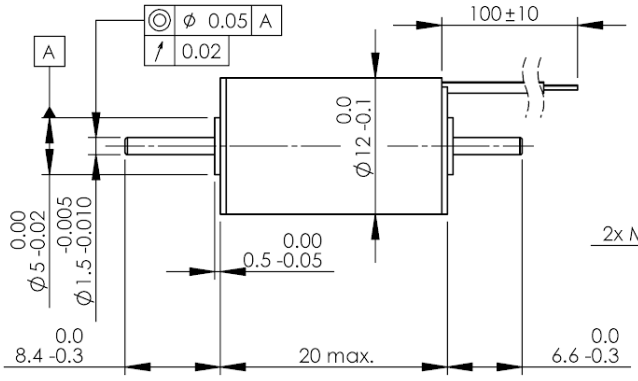

DIMENSIONS ARE IN mm
SURFACE FINISH: N7
TOLERANCES:
LINEAR: ±0.2
ANGULAR: ±1°

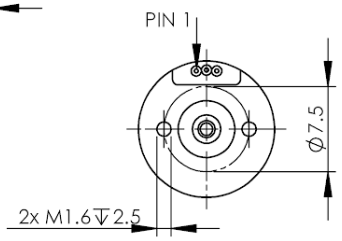

3RD ANGLE PROJECTION

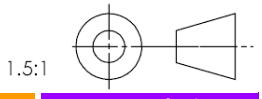

PIN	Description
1	Phase 1
2	Phase 2
3	Phase 3

	Design and accessories	Units	Samples available 712-201	Manufacturable on request 712-301	Custom design 712-XXX
A	Availability		Stocked design	8 weeks	8 weeks
B	Motor Type		Brushless	Brushless	Brushless
C	Commutation		Sensorless	Sensored / sensorless	Sensored / sensorless
D	Shafts		Dual	Dual	Dual / single
E	Encoder		Not fitted	Not fitted	Magnetic / optical
F	Gearbox		Not fitted	Not fitted	Range 1:4 ~ 1:3560
G	Connections		Tinned	Tinned	To requirement
H	Cable		100mm x AWG28	100mm x AWG28	To requirement
I	Housing Material		Aluminium alloy	Aluminium alloy	Aluminium alloy
J	Body diameter	mm	12	12	
K	Body length	mm	20	20	
L	Weight	g	9.8	9.8	
	Performance characteristics				
1	Nominal voltage	V	6	9	This motor can be wound for nominal voltages in a 6 ~ 9V range. Nominal load, no load, and stall points , and efficiency will depend on the winding design. Please contact support@pmdri.com
2	No load speed	rpm	26 870	35 950	
3	No load current	A	0.23	0.16	
4	Nominal speed	rpm	18 160	27 937	
5	Nominal torque	mNm	1.60	1.50	
6	Nominal current	A	0.81	0.66	
7	Stall torque	mNm	4.35	7.05	
8	Stall current	A	2.17	3.10	
9	Maximum efficiency	%	62.30	69.80	
	Winding specific characteristics				
10	Terminal resistance	Ω	2.76	2.76	Winding dependent
11	Terminal inductance	mH	0.19	0.19	
12	Torque constant (Kt)	mNm/A	2.00	2.27	
13	Speed constant (Kv)	rpm/V	4 740	4 212	
14	Speed / torque gradient	rpm/mNm	4 580	5 386	
15	Mechanical time constant	ms	10.0	9.6	
16	Rotor inertia	mNm²	0.017	0.017	

	Motor body characteristics			
17	Thermal resistance housing-ambient		°C/W	38.3
18	Thermal resistance winding-housing		°C/W	9.6
19	Thermal time constant winding		s	5
20	Thermal time constant motor		s	196
21	Ambient temperature	min	°C	-30
		max	°C	+100
22	Max. permissable winding temperature		°C	+125
23	Max. permissable rotor speed		rpm	50 000
24	Axial play at axial load	< 0.8N	mm	0.0
		> 0.8N	mm	0.3 max
25	Radial play			Preloaded
26	Max. axial load (dynamic)		N	0.3
27	Max. force for press fits (static)		N	11.0
	with shaft supported		N	200.0
28	Max. radial loading (5mm from flange)		N	4.3
29	Number of pole pairs			1
30	Number of winding phases			3

Operating range (based on ambient 25°C)
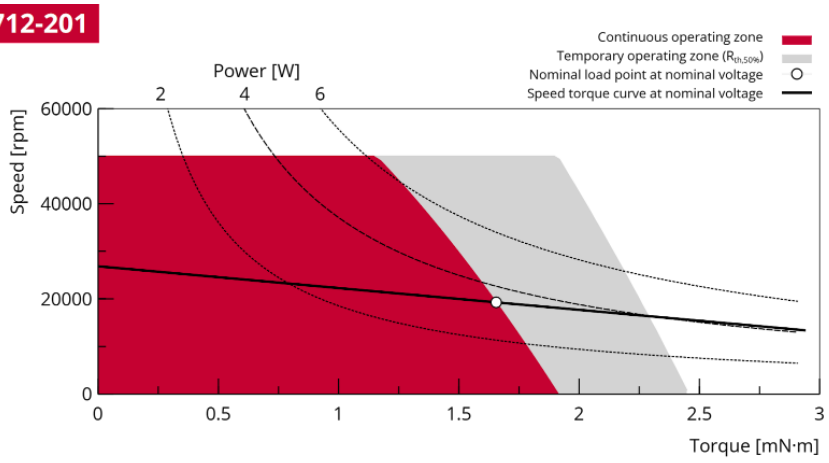
712-201